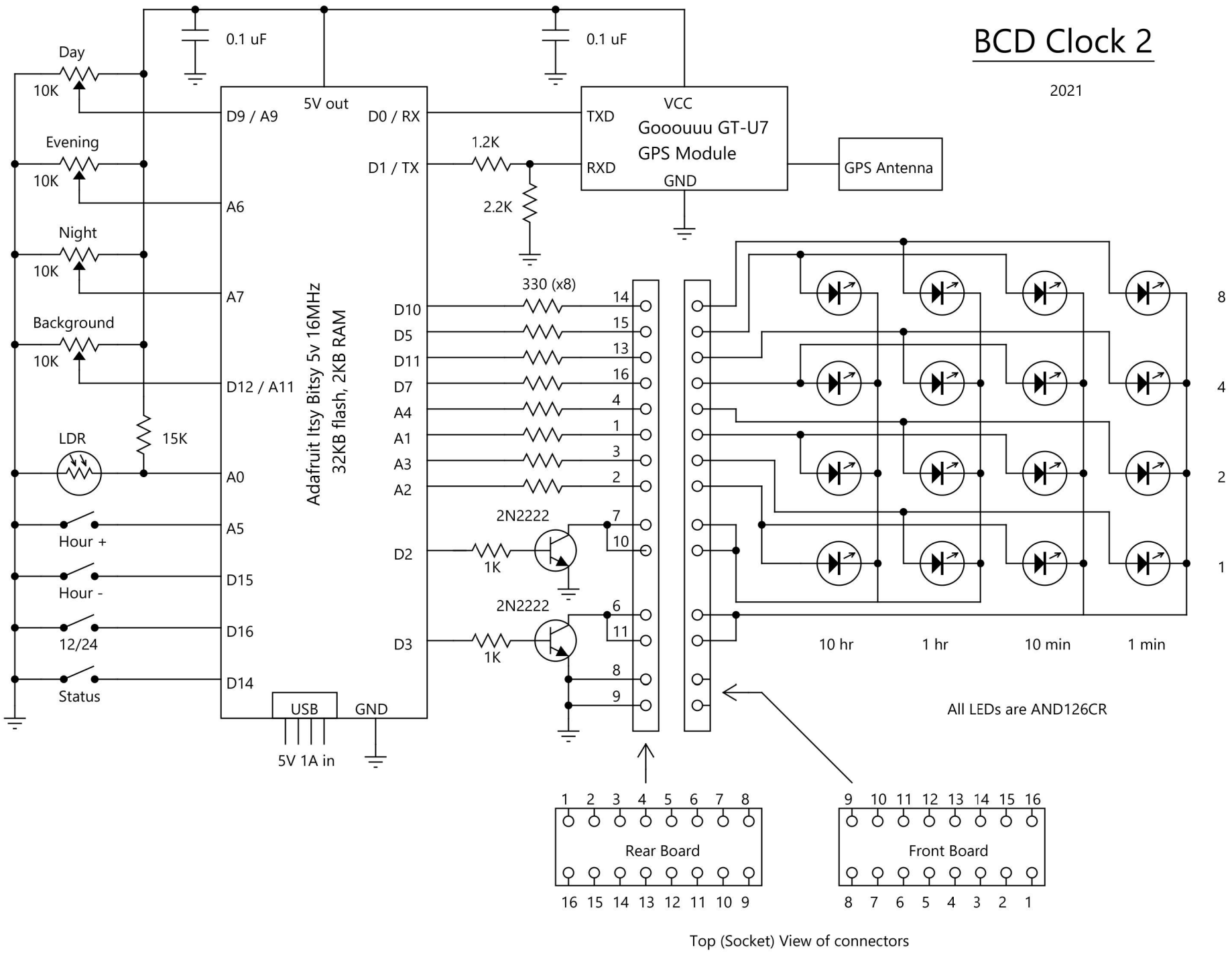
BCD Clock 2
2021
0.1 uF
0.1 uF
Day
10K
Evening
10K
Night
10K
Background
10K
LDR
15K
Hour +
Hour -
12/24
Status
5V out
D9 / A9
A6
A7
D12 / A11
A0
A5
D15
D16
D14
D0 / RX
D1 / TX
D10
D5
D11
D7
A4
A1
A3
A2
D2
D3
Adafruit Itsy Bitsy 5v 16MHz
32KB flash, 2KB RAM
USB
GND
5V 1A in
1.2K
2.2K
VCC
TXD
RXD
GND
Gooouuu GT-U7
GPS Module
GPS Antenna
330 (x8)
2N2222
2N2222
1K
1K
14
15
13
16
4
1
3
2
7
10
6
11
8
9
8
4
2
1
10 hr
1 hr
10 min
1 min
All LEDs are AND126CR
1 2 3 4 5 6 7 8
Rear Board
16 15 14 13 12 11 10 9
9 10 11 12 13 14 15 16
Front Board
8 7 6 5 4 3 2 1
Top (Socket) View of connectors